SH 103 P 0 X

GB English

Operating Instructions

OVEN

Contents

Operating Instructions,1
Warnings,2
Description of the appliance,3
Description of the appliance,4
Installation,5
Electrical Connection,5
Start-up and use,7
Modes,8
Precautions and tips,12
Maintenance and care,12
Troubleshooting,14
After Sales Service,15
Guarantee,16

Hotpoint

Please phone us on 08448 24 24 24 to activate your guarantee

Warnings

WARNING: The appliance and its accessible parts become hot during use. Care should be taken to avoid touching heating elements. Children less than 8 years of age shall be kept away unless continuously supervised. This appliance can be used by children aged from 8 years and above and persons with reduced physical, sensory or mental capabilities or lack of experience and knowledge if they have been given supervision or instruction concerning use of the appliance in a safe way and understand the hazards involved. Children shall not play with the appliance. Cleaning and user maintenance shall not be made by children without supervision.

Do not use harsh abrasive cleaners or sharp metal scrapers to clean the oven door glass since they can scratch the surface, which may result in shattering of the glass.

Never use steam cleaners or pressure cleaners on the appliance.

WARNING: Ensure that the appliance is switched off before replacing the lamp to avoid the possibility of electric shock.

Before initiating the automatic cleaning cycle:
• clean the oven door;
• remove large or coarse food residues from the inside of the oven using a damp sponge. Do not use detergents;
• remove all accessories and the sliding rack kit (where present);
• do not place tea towels

Keep children away from the appliance during the automatic cleaning cycle as surfaces may become very hot.

! When you place the rack inside, make sure that the stop is directed upwards and in the back of the cavity.

Description of the appliance

Overall view

1. **POSITION 1**
2. **POSITION 2**
3. **POSITION 3**
4. **POSITION 4**
5. **POSITION 5**
6. **GUIDES** for the sliding racks
7. **DRIPPING PAN**
8. **GRILL**
9. **Control panel**

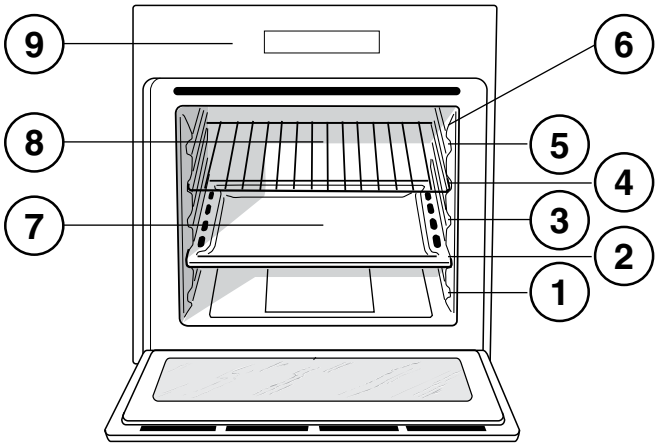

GB

Description of the appliance

Control panel

1. **MANUAL COOKING MODE** Icons
2. **FAST CLEAN** selector
3. **TEMPERATURE** display
4. **TEMPERATURE** icon
5. **DURATION** icon
6. **TIME** display
7. **END OF COOKING** Icon
8. **DOOR/CONTROL PANEL LOCK icon**
9. **START / STOP**
10. **LIGHT** icon
11. **CLOCK** icon
12. **MINUTE MINDER** Icon
13. **TIME / TEMPERATURE ADJUSTMENT** Icons
14. **PREHEATING / RESIDUAL HEAT** icons
15. **DOOR LOCK** indicator
16. **AUTOMATIC/ECO COOKING MODE** icons
17. **CONTROL PANEL POWER BUTTON**

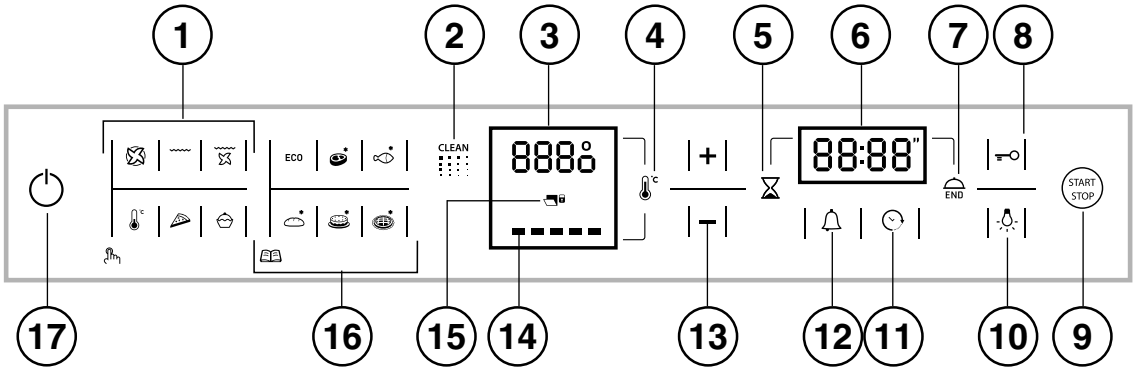

Installation

! Please keep this instruction booklet in a safe place for future reference. If the appliance is sold, given away or moved, please make sure the booklet is also passed on to the new owners so that they may benefit from the advice contained within it.

! Please read this instruction manual carefully: it contains important information concerning the safe operation, installation and maintenance of the appliance.

Positioning

! Do not let children play with the packaging material; it should be disposed of in accordance with local separated waste collection standards (see Precautions and tips).

! The appliance must be installed by a qualified professional in accordance with the instructions provided. Incorrect installation may damage property or cause harm to people or animals.

Built-in appliances

Use an appropriate cabinet to ensure that the appliance operates properly:

- the panels adjacent to the oven must be made of heat-resistant material.
- cabinets with a veneer exterior must be assembled with glues which can withstand temperatures of up to 100°C.
- to install the oven **under the counter** (see diagram) or in a **kitchen unit**, the cabinet must have the following dimensions:

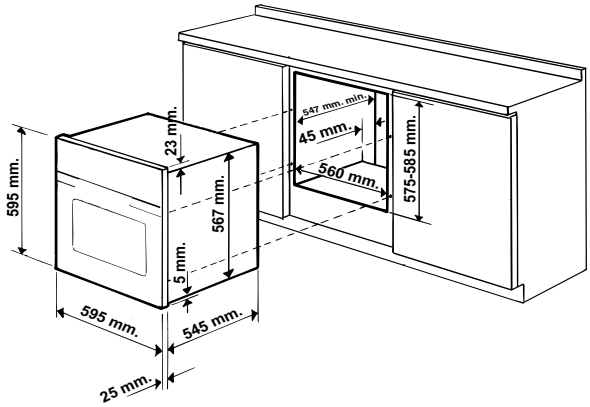

! The appliance must not come into contact with electrical parts once it has been installed.

The indications for consumption given on the data plate have been calculated for this type of installation.

Ventilation

To ensure adequate ventilation, the back panel of the cabinet must be removed. It is advisable to install the oven so that it rests on two strips of wood, or on a completely flat surface with an opening of at least 45 x 560 mm (see diagrams).

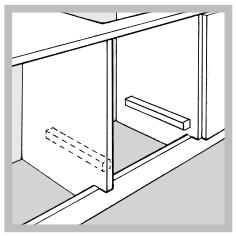

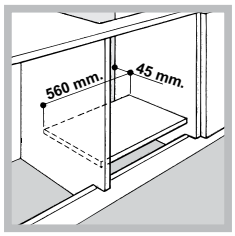

Centring and fixing

Secure the appliance to the cabinet by opening the oven door and inserting 4 screws into the 4 holes on the outer frame.

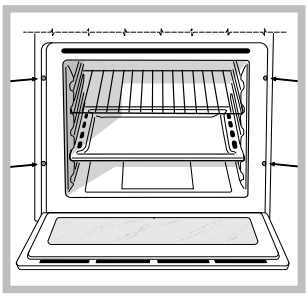

! All parts which ensure the safe operation of the appliance must not be removable without the aid of a tool.

Electrical Connection

The electrical connection to the mains must be made on the appliance. The power voltage and frequency are as indicated on the rating plate.

! THIS APPLIANCE MUST BE EARTHED.

Fitting the power supply cable

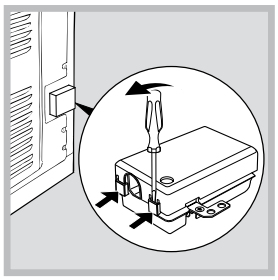

1. Open the terminal board by inserting a screwdriver into the side tabs of the cover. Use the screwdriver as a lever by pushing it down to open the cover (see diagram).

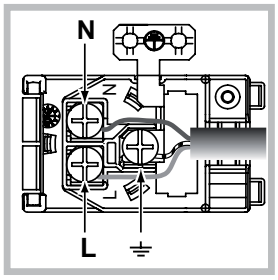

2. Install the power supply cable by loosening the cable clamp screw and the three wire contact screws L-N-⏚.
Connect the wires to the corresponding terminals: the Blue wire to the terminal marked (N), the Brown wire to the terminal marked (L) and the Yellow/Green wire to the terminal marked ⏚ (see diagram).
3. Secure the cable by fastening the clamp screw.
4. Close the cover of the terminal board.

Electrical Connection:

Voltage Frequency: see data plate
Fuse Section: 16A
Supply cable: 3x1.5mm^2

You can connect your oven to the system means of a terminal board. Refer to above information for the minimal cable sections and the calibration of the protective elements according to the connection.

If the appliance is installed **with a junction box**, an **omnipolar circuit breaker** - with a minimum contact opening of 3mm - should be installed between the appliance and the mains.

Power cable supply connection to the electrical mains:
We recommend you use a power supply cable which is long enough to allow you to take the oven out of its recess in the event of maintenance operations (only use HAR - H 05 - RRF quality cables fitted with a plug conforming to the regulations in force.
The plug must be accessible at all times.

! Unplug the appliance before all operations, even when replacing the oven lamp.

! Using the appliance without correct earthing is highly dangerous.

! After connecting the appliance to the flexible cable, tighten all the screws on the terminal board.

! The cable must be checked regularly and replaced by authorised technicians only (see Assistance).

APPLIANCE SPECIFICATIONS	
Dimensions*	width 43.5 cm height 32,4 cm depth 41.5 cm
Volume*	59 l
Dimensions**	width 45.5 cm height 32,4 cm depth 41.5 cm
Volume**	62 l
Electrical connections	voltage: 230-240V~ 50/60Hz or 50Hz (see data plate) maximum power absorbed 2800-3000 W
ENERGY LABEL and ECODESIGN	EU Directive no 65/2014 supplementing Directive 2010/30/EU. EU Regulation no 66/2014 implementing Directive 2009/125/EC. Standard EN 60350-1 Standard EN 50564 Declared energy consumption for Forced convection Class – heating mode: ECO.
	This appliance conforms to the following European Economic Community directives: - 2006/95/EC of 12/12/06 (Low Voltage) and subsequent amendments; - 2004/108/EC of 15/12/04 (Electromagnetic Compatibility) and subsequent amendments; - 93/68/EEC of 22/07/93 and subsequent amendments. - 2002/96/EU and subsequent amendments. - 1275/2008 standby/off mode.

* Only for models with drawn rails.
** Only for models with wire rails.

Start-up and use

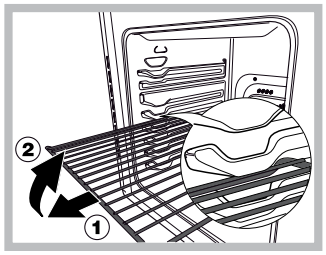

WARNING! The oven is provided with a stop system to extract the racks and prevent them from coming out of the oven (1).
As shown in the drawing, to extract them completely, simply lift the racks, holding them on the front part, and pull (2).

! The first time you use your appliance, heat the empty oven with its door closed at its maximum temperature for at least half an hour. Make sure that the room is well ventilated before switching the oven off and opening the oven door. The appliance may emit a slightly unpleasant odour caused by protective substances used during the manufacturing process burning away.

! To make the setting process easier, press and hold the "+" and "−" icons to scroll through the numbers on the display rapidly.

! Each setting will automatically be stored in the appliance memory after 10 seconds.

! The touch controls cannot be activated if the user is wearing gloves.

! In order to optimise the cooking performance, when starting the selected function, product settings will be applied that could cause a delayed start of the fan and heating elements.

Door/Control panel lock

! The door and the control panel can be locked while the oven is off, once cooking has started or finished and during programming.

To lock the door and the oven controls, press and hold the icon for at least 2 seconds. A buzzer will sound and the TEMPERATURE display shows the key symbol "O—n". The icon will light up to indicate lock activation. To deactivate the lock, press and hold the icon again for at least 2 seconds.

! When cleaning the appliance, the door lock may be closed accidentally (there is an exposed spring). If this happens, reopen it by turning the door lock upwards (see figure).

Setting the clock

! The clock can only be set when the oven is switched off. If the oven is in standby mode, pressing the icon once will display the current time setting. Press it again to set the time.

After connection to the power supply network or after a blackout, the icon and the digits on the TIME display will flash for 10 seconds.
To set the clock:

1. Press the icon.
2. Adjust the hour figure using the "+" and "−" icons.
3. Once you have reached the correct hour value, press the iconn.
4. Repeat the above process to set the minutes.

If a blackout occurs, it will be necessary to reset the clock. If the icon flashes on the display, this indicates that the clock has not been set correctly.

Setting the minute minder

! The minute minder may be set regardless of whether the oven is switched on or off. It does not switch the oven on or off.

When the set time has elapsed, the timer emits a buzzer that will automatically stop after 30 seconds or when any active button on the control panel is pressed.
To adjust the timer proceed as follows:

1. Press the icon.
2. Set the desired time using icons "+" and "−".
3. Once you have reached the desired value, press the icon again.

The lit symbol will remind you that the minute minder is on.

To cancel the minute minder, press the icon and use the "+" and "−" icons to set the time to 00:00. Press icon again.

The icon will switch off to indicate that the minute minder has been disabled.

Starting the oven

1. Switch the control panel on by pressing the icon. The appliance buzzer sounds three times (ascending) and all icons light up in sequence.
2. Press the icon corresponding to the desired cooking mode. The TEMPERATURE display shows:
- the temperature associated with the mode, if programming manually;
- "Auto", if programming is automatic.
The TIME display shows:
- the current time, if programming manually;
- the duration, if programming is automatic.
3. Press the START STOP icon to begin cooking.
4. The oven will begin its preheating phase, the preheating indicators will light up as the temperature rises.
5. When the preheating process has finished, a buzzer sounds and all the preheating indicator lights show that this stage has been completed: the food can then be placed in the oven.
6. During cooking it is always possible to:
- change the temperature by pressing the °C icon, followed by the "+" and "−" icons (manual modes only);
- set the duration of a cooking mode (see Cooking Modes);
- press the START STOP icon to stop cooking. In this case the appliance stores the temperature modified previously in its memory (manual modes only);
- switch off the oven by pressing the icon for 3 seconds.
7. If a blackout occurs while the oven is already in operation, an automatic system within the appliance will reactivate the cooking mode from the point at which it was interrupted, provided that the temperature has not dropped below a certain level. Programmed cooking modes which have not yet started will not be restored and must be reprogrammed (for example: a cooking mode has been programmed to start at 20:30. At 19:30 a blackout occurs. When the power supply is restored, the mode will have to be reprogrammed).

! There is no preheating stage for the GRILL mode.

! Never put objects directly on the bottom of the oven; this will prevent the enamel coating from being damaged.

! Always place cookware on the rack(s) provided.

Cooling ventilation
In order to cool down the external temperature of the oven, a cooling fan blows a stream of air between the control panel and the oven door, as well as towards the bottom of the oven door.
At the beginning of the FAST CLEAN mode, the cooling fan operates at low speed.

! Once cooking has been completed, the cooling fan continues to operate until the oven has cooled down sufficiently.

Oven light
The light comes on when the oven door is opened or when a cooking mode starts.
The icon can be used to switch on the light at any time.

Residual heat indicators
The appliance is fitted with a residual heat indicator. When the oven is off, the "residual heat" bar on the display lights up to indicate high temperatures inside the oven cavity. The individual segments of the bar switch off one by one as the temperature inside the oven falls.

Demo mode
The oven can operate in the DEMO mode: all heating elements are deactivated, and the controls remain operative.
To activate DEMO mode, press and release icon , then icons "+" and "–" simultaneously for 6 seconds, and then press and release icon .
A buzzer sounds and the TEMPERATURE display shows "dEon". To deactivate DEMO mode, when the oven is off press and hold icon START STOP and icon "–" simultaneously for 3 seconds. A buzzer sounds and the "dEoF" message disappears from the display.

Restoring the factory settings
The oven factory settings can be restored to reset all selections made by the user (clock and customised durations). To carry out a reset, switch off the oven, then press and hold the button corresponding to the first manual cooking mode (top left) and the START STOP icon simultaneously for 6 seconds. Once the restore procedure is complete, a buzzer will sound. The first time the icon is pressed, the oven will behave as if it is being switched on for the first time.

Standby
This product complies with the requirements of the latest European Directive on the limitation of power consumption of the standby mode. If no buttons are pressed for 30 minutes and the control panel/door lock has not been activated, the appliance automatically reverts to standby mode. Standby mode is indicated by the high luminosity "Clock button" light. As soon as interaction with the machine resumes, the system's operating mode is restored.

Modes

! Every time the oven is switched on, it suggests the first manual cooking mode.

Manual cooking modes
! All cooking modes have a default cooking temperature which may be adjusted manually to a value between 30°C and 250°C as desired (300°C for GRILL mode). Any temperature adjustments will be stored in the appliance memory and suggested again the next time this mode is used. If the selected temperature is lower than the temperature inside the oven, the text "Hot" appears on the TEMPERATURE display. However, it will still be possible to start cooking.

MULTILEVEL mode
All heating elements and the fan are activated. Since the heat remains constant throughout the oven, the air cooks and browns food in a uniform manner. A maximum of two racks may be used at the same time.

BARBECUE mode
The top heating element and the rotisserie spit (where present) are activated. The high and direct temperature of the grill is recommended for food which requires a high surface temperature. Always cook in this mode with the oven door closed (see "Practical cooking advice").

FAN GRILLING mode
The top heating element and the rotisserie spit (where present) are activated and the fan begins to operate. During part of the cycle the circular heating element is also activated. This combination of features increases the effectiveness of the unidirectional thermal radiation provided by the heating elements through the forced circulation of the air throughout the oven.
This helps prevent food from burning on the surface and allows the heat to penetrate right into the food. Always cook in this mode with the oven door closed (see "Practical cooking advice").

LOW TEMPERATURE modes
This type of cooking can be used for proving, defrosting, preparing yoghurt, heating dishes at the required speed and slow cooking at low temperatures. The temperature options are: 40, 65 and 90°C.

PIZZA modes
The top and circular heating elements switch on and the fan begins to operate. This combination heats the oven rapidly. If you use more than one rack at a time, switch the position of the dishes halfway through the cooking process.

BAKING mode
The rear heating element and the fan are switched on, thus guaranteeing the distribution of heat in a delicate and uniform manner throughout the entire oven. This mode is ideal for baking temperature sensitive foods (such as cakes, which need to rise).

ECO mode
The back heating element is turned on and the fan starts working, ensuring a smooth and uniform heat level inside the oven.
This programme is indicated for slow cooking of any type of food with temperatures which can be set up to a maximum of 200°C; the programme is also suitable for heating food and to complete the cooking process.

The programme is particularly suitable for the slow cooking of meat and fish, as it allows you to have softer meat and save energy at the same time. For a better energy effectiveness, when the product is turned on, the light stays on only for 30 seconds; in order to turn the light back on, please press the icon.

Automatic cooking modes

! The **temperature** and **cooking duration** are **pre-set values**, guaranteeing a perfect result every time - automatically. These values are set using the **C.O.P.® (Programmed Optimal Cooking**) system. The cooking cycle stops automatically and the oven indicates when the dish is cooked. You may start cooking whether the oven has been **preheated** or **not**.
The cooking duration can be customised according to personal taste by modifying the relevant value - before cooking begins - by ±5/20 minutes depending on the selected programme. The duration can however be modified even once cooking has begun. If the value is modified before the programme begins, it is stored in the memory and suggested again by the appliance when the programme is next used. If the temperature inside the oven is higher than the suggested value for the selected mode, the text "Hot" appears on the TEMPERATURE display and it will not be possible to begin cooking; wait for the oven to cool.

! When the cooking stage has been reached, the oven buzzer sounds.

! Do not open the oven door as this will disrupt the cooking time and temperature.

BEEF mode
Use this function to cook beef, pork and lamb. Place the food inside the oven while it is still cold. The dish may also be placed in a preheated oven.

FISH FILLETS mode
This function is ideal for cooking small-medium fillets. Place the food inside the oven while it is still cold.

BREAD mode
Use this function to bake bread. To obtain the best results, we recommend that you carefully observe the instructions below:
- follow the recipe;
- do not exceed the **maximum weight** of the dripping pan;
- **remember to pour 50 g (0,5 dl) of cold water into the baking tray in position 5**.
- The dough must be left to rise at room temperature for 1 – 1 ½ hours (depending on the room temperature) or until the dough has doubled in size.

Recipe for BREAD:
1 Dripping pan holding 1000 g Max, lower level
2 Dripping pans each holding 1000 g Max, medium and lower levels
Recipe for 1000 g of dough: 600 g flour, 360 g water, 11g salt, 25 g fresh yeast (or 2 sachets of powder yeast)
Method:
- Mix the flour and salt in a large bowl.
- Dilute the yeast in lukewarm water (approximately 35 degrees).
- Make a small well in the mound of flour.
- Pour in the water and yeast mixture.
- Knead the dough by stretching and folding it over itself with the palm of your hand for 10 minutes until it has a uniform consistency and is not too sticky.
- Form the dough into a ball shape, place it in a large bowl and cover it with transparent plastic wrap to prevent the surface of the dough from drying out. Select the manual LOW TEMPERATURE function on the oven and set the temperature to 40°C. Place the bowl inside and leave the dough to rise for approximately 1 hour (the dough should double in volume).
- Cut the dough into equal sized loaves.
- Place them in the dripping pan, on a sheet of baking paper.
- Dust the loaves with flour.
- Make incisions on the loaves.
- Place the food inside the oven while it is still cold.
- Start the BREAD cooking mode.
- Once baked, leave the loaves on one of the grill racks until they have cooled completely.

BAKED CAKES mode
This function is ideal for cooking desserts which are made using natural yeast, baking powder and desserts which contain no yeast. Place the dish in the oven while it is still cold. The dish may also be placed in a preheated oven.

TARTS mode
This function is ideal for all tart recipes (which normally need to be heated well from underneath). Place the food inside the oven while it is still cold. The dish may also be placed in a preheated oven.

Programming cooking

! A cooking mode must be selected before programming can take place.

! Once a cooking mode has been selected, the icon is activated; it will then be possible to program a duration. The END icon is only activated after a duration has been set; it will then be possible to program a delayed start.

Programming the duration

1. Press the icon; the icon and the numbers on the TIME display will flash.
2. Set the duration by pressing icons "+" and "–".
3. Once you have reached the desired duration, press the icon again.
4. Press the START STOP icon to begin cooking.
5. When cooking has finished, "END" appears on the TEMPERATURE display and a buzzer sounds.

- For example: it is 9:00 a.m. and a duration of 1 hour and 15 minutes is programmed. The programme will stop automatically at 10:15 a.m.

Programming delayed cooking

! A cooking duration must be set before the cooking end time can be scheduled.

! For the delayed programming to work properly, the clock should be set to the correct time.

1. Press the icon and repeat steps 1 to 3 as described for the duration setting.
2. Then press the END icon and set the end time using the "+" and "–" icons.
3. Once you have reached the desired end time, press the END icon again.
4. Press the START STOP icon to activate the programmed mode.

The and END icons will flash alternately to indicate that programming has taken place; in the time before cooking starts, the TIME display will show the duration and the cooking end time alternately.
5. Once cooking has finished, "END" appears on the TEMPERATURE display and a buzzer sounds.

- For example: it is 9:00 a.m. and a time of 1 hour and 15 minutes is programmed, while the end time is set to 12:30. The programme will start automatically at 11:15 a.m.

To cancel programming press the START STOP icon.

Practical cooking advice

! Do not place racks in position 1 and 5 during fan-assisted cooking. This is because excessive direct heat can burn temperature sensitive foods.

! In the GRILL and FAN GRILLING cooking modes, particularly when using the rotisserie spit, place the dripping pan in position 1 to collect cooking residues (fat and/or grease).

MULTILEVEL
- Use positions 2 and 4, placing the food which requires more heat on 2.
- Place the dripping pan on the bottom and the rack on top.

GRILL
- Place the rack in position 3 or 4. Position the food in the centre of the rack.
- We recommend that the temperature is set to its maximum level. The top heating element is regulated by a thermostat and may not always operate constantly.

PIZZA
- Use a lightweight aluminium pizza pan. Place it on the rack provided. For a crispy crust, do not use the dripping pan as this extends the total cooking duration and prevents the crust from forming.
- If the pizza has a lot of toppings, we recommend adding the mozzarella cheese to the top of the pizza halfway through the cooking process.

Cooking advice table

Modes	Foods	Weight (in kg)	Rack position: Standard guide rails	Rack position: Sliding guide rails	Preheating	Recommended Temperature (°C)	Cooking duration (minutes)
Manual							
Multilevel*	Pizza on 2 racks		2 and 4	1 and 3	yes	210-220	20-25
	Pies on two racks/cakes on 2 racks		2 and 4	1 and 3	yes	180	30-35
	Sponge cake on 2 racks (on the dripping pan)		2 and 4	1 and 3	yes	160-170	20-30
	Roast chicken + potatoes	1+1	1 and 2/3	1 and 3	yes	200-210	65-75
	Lamb	1	2	1	yes	190-200	45-50
	Mackerel	1	1 or 2	1	yes	180	30-35
	Lasagne	1	2	1	yes	180-190	35-40
	Cream puffs on 3 racks		1 and 3 and 5	1 and 2 and 4	yes	190	20-25
	Biscuits on 3 racks		1 and 3 and 5	1 and 2 and 4	yes	180	10-20
	Cheese puffs on 2 racks		2 and 4	1 and 3	yes	210	20-25
	Savoury pies		1 and 3	1 and 3	yes	190-200	25-35
Grill*	Mackerel	1	4	3	no	300	10-20
	Sole and cuttlefish	0,7	4	3	no	300	10-15
	Squid and prawn kebabs	0,7	4	3	no	300	10-15
	Cod fillet	0,7	4	3	no	300	10-15
	Grilled vegetables	0,5	3 or 4	2 or 3	no	300	15-20
	Veal steak	0,8	4	3	no	300	10-20
	Sausages	0,7	4	3	no	300	10-20
	Hamburgers	n° 4 or 5	4	3	no	300	10-12
	Toasted sandwiches (or toast)	n° 4 or 6	4	3	no	300	3-5
	Spit-roast chicken using rotisserie spit (where present)	1	-	-	no	300	70-80
	Spit-roast lamb using rotisserie spit (where present)	1	-	-	no	300	70-80
Fan grilling*	Grilled chicken	1,5	2	2	no	210	55-60
	Cuttlefish	1	2	2	no	200	30-35
	Spit-roast chicken using rotisserie spit (where present)	1,5	-	-	no	210	70-80
	Spit-roast duck using rotisserie spit (where present)	1,5	-	-	no	210	60-70
	Roast veal or beef	1	2	2	no	210	60-75
	Roast pork	1	2	2	no	210	70-80
	Lamb	1	2	2	no	210	40-45
Low temperature*	Proving / Defrosting	-	2	1	no	40	-
	White meringues	-	2	1	no	65	8-12 ore
	Meat / Fish	-	2	1	no	90	90-180
Pizza*	Pizza	0,5	2	1	yes	210-220	15-20
	Focaccia bread	0,5	2	1	yes	190-200	20-25
Baking*	Tarts	0,5	2 or 3	1 or 2	yes	180	25-35
	Fruit cakes	1	2 or 3	1 or 2	yes	180	40-50
	Sponge cake made with yoghurt	0,7	2 or 3	1 or 2	yes	180	45-55
	Small cakes on 2 racks	0,7	2 and 4	1 and 3	yes	180-190	20-25
	Sponge cake	0,6	2 or 3	1 or 2	yes	160-170	35-40
	Cream puffs on 2 racks	0,7	1 and 3	1 and 2	yes	180-190	20-30
	Biscuits on 2 racks	0,7	1 and 3	1 and 2	yes	180	20-25
	Filled pancakes	0,8	2	1	yes	200	30-35
	Meringues on 2 racks	0,5	1 and 3	1 and 2	yes	90	180
	Cheese puffs	0,5	2	1	yes	210	20-25
Automatic**							
Beef	Roast dishes	1	2 or 3	2	no		
Fish fillets	Cod	0,4-0,5	2 or 3	2	no		
	Perch	0,4-0,5	2 or 3	2	no		
	Trout	0,4-0,5	2 or 3	2	no		
Bread***	Bread (see recipe)	1	1 or 2	1	no		
Baked cakes	Baked cakes	1	2 or 3	2	no		
Tarts	Tarts	0,5	2 or 3	2	no		

* The cooking times listed above are intended as guidelines only and may be modified according to personal tastes. Oven preheating times are set as standard and may not be modified manually.

** The duration of the automatic cooking functions are set by default. The values can be modified by the user, starting with the default duration.

*** As stated in the recipe, pour **50** g (**0,5** dl) water into the dripping pan in position 5.

! ECO programme: This programme can be used for slow cooking of any type of food with temperatures which can be set up to a maximum of 200°C; the programme is also suitable for heating food and to complete the cooking process.

PLEASE PHONE US TO REGISTER YOUR APPLIANCE AND ACTIVATE YOUR PARTS GUARANTEE ON 08448 24 24 24

Precautions and tips

! This appliance has been designed and manufactured in compliance with international safety standards. The following warnings are provided for safety reasons and must be read carefully.

General safety

- The appliance was designed for domestic use inside the home and is not intended for commercial or industrial use.
- The appliance must not be installed outdoors, even in covered areas. It is extremely dangerous to leave the appliance exposed to rain and storms.
- When moving or positioning the appliance, always use the handles provided on the sides of the oven.
- Do not touch the appliance while barefoot or with wet or damp hands and feet.
- **The appliance must be used by adults only for the preparation of food, in accordance with the instructions provided in this booklet. Any other use of the appliance (e.g. for heating the room) constitutes improper use and is dangerous. The manufacturer may not be held responsible for any damage caused as a result of improper, incorrect and unreasonable use of the appliance.**
- **Do not touch the heating elements or certain parts of the oven door when the appliance is in use; these parts become extremely hot. Keep children well away from the appliance.**
- Make sure that the power supply cables of other electrical appliances do not come into contact with the hot parts of the oven.
- The ventilation and heat dispersal openings must never be obstructed.
- Always grip the oven door handle in the centre: the ends may be hot.
- Always use oven gloves when placing cookware in the oven or when removing it.
- Do not use aluminium foil to line the bottom of the oven.
- Do not place flammable materials in the oven: if the appliance is switched on accidentally, the materials could catch fire.
- When unplugging the appliance, always pull the plug from the mains socket; do not pull on the cable.
- Do not perform any cleaning or maintenance work without having disconnected the appliance from the electricity mains.
- If the event of malfunctions, under no circumstances should you attempt to perform the repairs yourself. Contact an authorised Service Centre (see Assistance).
- Do not rest objects on the open oven door.
- Do not let children play with the appliance.
- The appliance should not be operated by people (including children) with reduced physical, sensory or mental capacities, by inexperienced individuals or by anyone who is not familiar with the product. These individuals should, at the very least, be supervised by someone who assumes responsibility for their safety or receive preliminary instructions relating to the operation of the appliance.
- **The appliance is not intended to be operated by means of an external timer or separate remote-control system.**

Disposal

- When disposing of packaging material: observe local legislation so that the packaging may be reused.
- The European Directive 2012/19/EU on Waste Electrical and Electronic Equipment (WEEE), requires that old household electrical appliances must not be disposed of in the normal unsorted municipal waste stream. Old appliances must be collected separately in order to optimise the recovery and recycling of the materials they contain and reduce the impact on human health and the environment. The crossed out "wheeled bin" symbol on the product reminds you of your obligation, that when you dispose of the appliance it must be separately collected.
  Consumers should contact their local authority or retailer for information concerning the correct disposal of their old appliance.

Respecting and conserving the environment

- Whenever possible, avoid pre-heating the oven and always try to fill it. Open the oven door as little as possible because heat is lost every time it is opened. To save a substantial amount of energy, simply switch off the oven 5 to 10 minutes before the end of your planned cooking time and use the heat the oven continues to generate.
- Automatic programmes are based on standard food product.
- Keep gaskets clean and tidy to prevent any door energy losses
- If you have a timed tariff electricity contract, the "delay cooking" option will make it easier to save money by moving operation to cheaper time periods.

! This product complies with the requirements of the latest European Directive on the limitation of power consumption of the standby mode.

Maintenance and care

Switching the appliance off

Disconnect your appliance from the electricity supply before carrying out any work on it.

Cleaning the appliance

- Slight differences in colour on the front of the oven are due to the different materials used, i.e. glass, plastic or metal.
- Any shady areas resembling grooves on the oven door glass are caused by reflections from the oven light.
- The enamel is branded at very high temperatures. This process may cause colour variations. This is normal and will not affect appliance operation in any way. The thin edges of the sheet metal cannot be entirely enamelled and may therefore appear to be unfinished. This will not affect the rust protection.
- The stainless steel or enamel-coated external parts and the rubber seals may be cleaned using a sponge that has been soaked in lukewarm water and neutral soap. Use specialised products for the removal of stubborn stains. After cleaning, rinse and dry thoroughly. Do not use abrasive powders or corrosive substances.
- The inside of the oven should ideally be cleaned after each use, while it is still lukewarm. Use hot water and detergent, then rinse well and dry with a soft cloth. Do not use abrasive products.
- All accessories - with the exception of the sliding racks - can be washed like everyday crockery, and are even dishwasher safe.
- We recommend that detergents are not sprayed directly onto the control panel, but that a sponge is used instead.

! Never use steam cleaners or pressure cleaners on the appliance.

Cleaning the oven door

Clean the glass part of the oven door using a sponge and a non-abrasive cleaning product, then dry thoroughly with a soft cloth. Do not use rough abrasive material or sharp metal scrapers as these could scratch the surface and cause the glass to crack.

To clean the oven more thoroughly, you can remove its door:

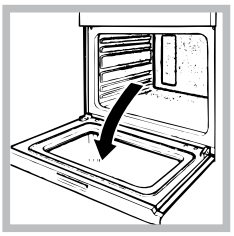

1. Open the oven door fully (see diagram);

2. Lift up and turn the small levers located on the two hinges (see diagram);

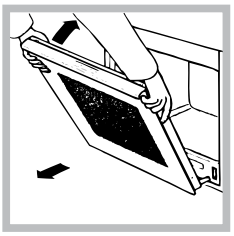

3. Grip the door on the two external sides and close it approximately half way. Pull the door towards you, lifting it out of its slot (see diagram).

To replace the door, reverse this sequence.

Inspecting the seals

Check the door seals around the oven regularly. If the seals are damaged, please contact your nearest Service Centre (see Assistance). We recommend that the oven is not used until the seals have been replaced.

Replacing the light bulb

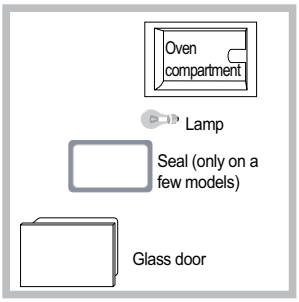

To replace the oven light bulb:

1. Remove the glass cover of the lamp-holder.
2. Remove the light bulb and replace it with a similar one: Wattage 25 W, cap E 14.
3. Replace the glass cover (see diagram).

! Do not use the oven lamp as/for ambient lighting.

Automatic cleaning with the FAST CLEAN function

With the FAST CLEAN mode, the internal temperature of the oven reaches 500°C. The pyrolytic cycle is activated, burning away food and grime residues. Dirt is literally incinerated.

Keep children away from the appliance during the automatic cleaning cycle as surfaces may become very hot. Particles may ignite inside the oven as a result of the combustion process. There is no cause for concern: this process is both normal and hazard-free.

Before initiating the FAST CLEAN mode:

- clean the oven door;
- remove large or coarse food residues from the inside of the oven using a damp sponge. Do not use detergents;
- remove all accessories and the sliding rack kit (where present);
- do not place tea towels or pot holders over the oven handle.

! If the oven is too hot, the pyrolytic cycle may not start. Wait for the oven to cool down.

! The programme may only be started once the oven door has been closed.

To activate the Fast Clean programme:

1. Switch the control panel on by pressing the icon.
2. Press the CLEAN icon; the TIME display will show the default duration of 1:30 h (normal cycle), while he TEMPERATURE display will show “Piro” and “nor” alternately;
3. The desired cleaning level can be selected by pressing the icon, then:
- pressing “+” to switch to the intensive cycle: the duration is 2 h and the TEMPERATURE display shows the text “Piro” and “int” alternately;
- pressing “–” to switch to the economy cycle: the duration is 1 h and the TEMPERATURE display shows the text “Piro” and “eco” alternately.

Safety devices

- the door locks automatically as soon as the temperature reaches a high value; the icon lights up on the display;
- pressing the START STOP icon cancels the cleaning cycle t any time;
- if a malfunction occurs, the heating elements will be switched off;
- once the oven door has been locked, you cannot change the duration and end time settings.

Programming delayed automatic cleaning

! Programming is possible only after selecting the FAST CLEAN mode.

1. Press the END icon and set the end time using the “+” and “–” icons.
2. Once you have reached the desired end time, press the END icon again.
3. Press the START STOP icon to activate the programmed mode.
4. When the selected time has elapsed, “END” appears on the TEMPERATURE display and a buzzer sounds.

- For example: it is 9:00 a.m. and the Economy (ECO) FAST CLEAN level has been selected, with the default duration of 1 hour. 12:30 is scheduled as the end time. The programme will start automatically at 11:30 a.m.

The icons and END flash to indicate that programming has taken place. After programming, in the time before the Fast Clean mode starts, the TIME display indicates the duration and end of the Fast Clean mode alternately.

To cancel programming press the START STOP icon.

GB

Once the automatic cleaning cycle is over

Before you can open the oven door, you will have to wait for the icon to switch off: this indicates the oven temperature has dropped to an acceptable level. You will notice some white dust deposits on the bottom and the sides of your oven; remove these deposits with a damp sponge once the oven has cooled down completely. Alternatively, you can make use of the already heated oven, in which case it is not necessary to remove the deposits, they are completely harmless and will not affect your food in any way.

Troubleshooting

Problem	Possible cause	Solution
The “Clock button” and the digits on the display flash.	The appliance has just been connected to the electricity mains or there has been a blackout.	Set the clock.
A programmed cooking mode does not start.	There has been a blackout.	Reprogram the cooking mode.
Only the high luminosity “Clock button” is lit.	The appliance is in standby mode.	Press any button to exit standby mode.
An automatic mode has been selected. “Hot” appears on the display and cooking does not start.	The temperature inside the oven is higher than the suggested value for the selected mode.	Wait for the oven to cool down.
Fan-assisted cooking has been selected and the food looks burnt.	Positions 1 and 5: the direct heat could cause temperature-sensitive foods to burn.	We recommend switching dripping pan positions halfway through cooking.

NOTICE

GB

Do not place or rest anything on the open door

Make sure that the racks and dripping pans have been inserted fully before closing the door

Please read the manual carefully for information regarding the automatic cleaning (pyrolytic) cycle

After Sales Service

No one is better placed to care for your Hotpoint appliance during the course of its working life than us – the manufacturer.

Essential Contact Information

Hotpoint Service

We are the largest service team in the country offering you access to 400 skilled telephone advisors and 1000 fully qualified engineers on call to ensure you receive fast, reliable, local service.

UK: 08448 224 224
Republic of Ireland: 0818 313 413
www.hotpointservice.co.uk

Please note: Our advisors will require the following information:

Model number:	
Serial number:	

Parts and Accessories

We supply a full range of genuine replacement parts as well as accessory products that protect and hygienically clean your appliance to keep it looking good and functioning efficiently throughout its life.

UK: 08448 225 225
Republic of Ireland: 0818 313 413
www.hotpointservice.co.uk

Appliance Registration

We want to give you additional benefits of Hotpoint ownership. To activate your free 5 year parts guarantee you must register your appliance with us.

UK: 08448 24 24 24
Republic of Ireland: 01 230 0800
www.hotpointservice.co.uk

Indesit Company UK Ltd. Morley Way, Peterborough, PE2 9JB
Indesit Company Unit 49 Airways Industrial Estate, Dublin 17

Recycling and Disposal Information

As part of Hotpoint's continued commitment to helping the environment, Hotpoint reserves the right to use quality, recycled components to keep down customer costs and minimise material wastage.

Please dispose of packaging and old appliances carefully. To minimise the risk of injury to children, remove the door, plug, and cut the mains cable off flush with the appliance. Dispose of these parts separately to ensure that the appliance can no longer be plugged into mains socket, and the door cannot be locked shut.

PLEASE PHONE US TO REGISTER YOUR APPLIANCE AND ACTIVATE YOUR PARTS GUARANTEE ON 08448 24 24 24

GB

Guarantee

12 months Parts and Labour Guarantee

Your appliance has the benefit of our manufacturer's guarantee, which covers the cost of breakdown repairs for twelve months from the date of purchase.

This gives you the reassurance that if, within that time, your appliance is proven to be defective because of either workmanship or materials, we will, at our discretion, either repair or replace the appliance at no cost to you.

This guarantee is subject to the following conditions:

- The appliance has been installed and operated correctly and in accordance with our operating and maintenance instructions.
- The appliance is used only on the electricity or gas supply printed on the rating plate.
- The appliance has been used for normal domestic purposes only.
- The appliance has not been altered, serviced, maintained, dismantled, or otherwise interfered with by any person not authorised by us.
- Any repair work must be undertaken by us or our appointed agent.
- Any parts removed during repair work or any appliance that is replaced become our property.
- The appliance is used in the United Kingdom or Republic of Ireland.

The guarantee does not cover:

- Damage resulting from transportation, improper use, neglect or interference or as a result of improper installation
- Replacement of any consumable item or accessory. These included but not limited to: plugs, cables, batteries, light bulbs, fluorescent tubes and starters, covers and filters.
- Replacement of any removable parts made of glass or plastic.

THIS GUARANTEE WILL NOT APPLY IF THE APPLIANCE HAS BEEN USED IN COMMERCIAL OR NON-DOMESTIC PREMISES.

5 Year Parts Guarantee

Hotpoint also offers you a free 5 year parts guarantee. This additional guarantee is conditional on you registering your appliance with us and the parts being fitted by one of our authorised engineers. There will be a charge for our engineer's time. To activate the extra parts warranty on your appliance, simply call our registration line on **08448 24 24 24 (Republic of Ireland 01 230 0800)**

Extended Guarantees

We offer a selection of protection plans that enable you to fully cover yourself against the expense of repair bills for the life of your policy. To find the ideal plan for you please call our advice line on **08448 226 226 (Republic of Ireland 01 230 0233).**

Free Helpdesk Service

We have a dedicated team who can provide free advice and assistance with your appliance if you experience any technical difficulties within the first 90 days of ownership. Simply call our Hotpoint Service Hotline on **08448 224 224 (Republic of Ireland 0818 313 413)** for telephone assistance, or, where necessary, to arrange for an engineer to call.

Indesit Company S.p.A.
Viale Aristide Merloni,47
60044 Fabriano (AN)
www.hotpoint.co.uk

PLEASE PHONE US TO REGISTER YOUR APPLIANCE AND ACTIVATE YOUR PARTS GUARANTEE ON 08448 24 24 24